Slant/Fin®

DHWG

DOMESTIC HOT WATER GENERATOR

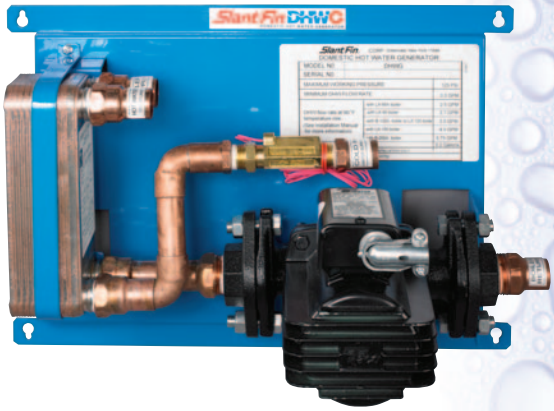

Provides virtually instant domestic hot water from Slant/Fin Lynx and similar high efficiency boilers with priority control capabilities.

The DHWG is a unique way to make domestic hot water using a high efficiency boiler as the heat source. Incorporating a brazed plate stainless steel heat exchanger, boiler water flows between half the plates transferring heat to domestic water on the other side of the plates. This remarkable unit transfers heat to the domestic hot water with nearly 100 percent efficiency. It requires no maintenance or cleaning and will last for years and years. A circulator pump and flow switch are included. The pump is sized to overcome the friction losses of the boiler and the heat exchanger and therefore provides enough boiler water flow to transfer the maximum amount of heat energy from the boiler to the domestic hot water.

- Hot water when you need it
- Ideal for small residences
  - Provides up to 4 gpm hot water with 120 MBH boiler
  - Provides 5.8 GPM of hot water at 55˚F temperature rise (see chart below) with 175 MBH boiler
- Heat transfer from boiler to DHW with nearly 100% efficiency
- Maintenance-free brazed plate stainless steel heat exchanger
- Wall Hung, light weight, easy to install
- Reversible - mounts with piping facing left or right
- Taco - 0011 circulator with integral flow check
- Flow switch included

Height: 12"
Width: 17"
Depth: 8-3/8"

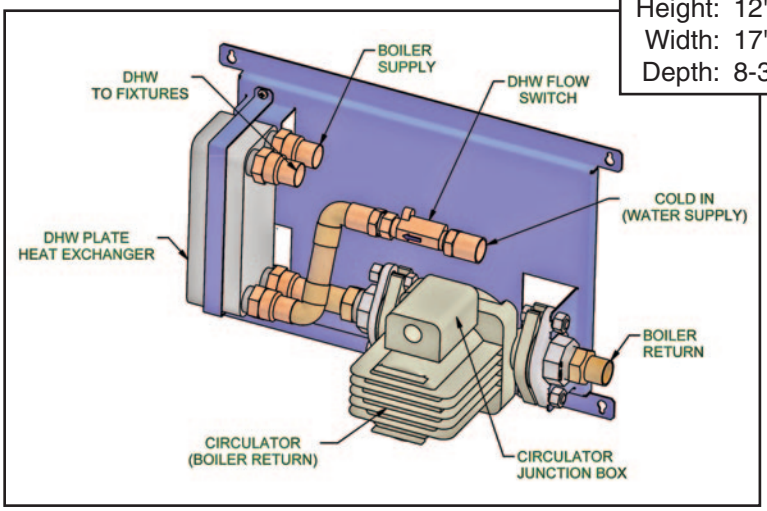

Components of the DHWG

"DHWG temp rise"

The amount of hot water produced is largely dependent on the BTUH output of the boiler, the desired flow rate, the temperature of the hot water desired and the temperature of the incoming cold water. In winter, water can be as cool as 40˚F. Therefore if you want 105˚F water (approximately the temperature one would like for a shower, a 65 degree temperature rise is required.

The hot water production is limited primarily by the boiler's BTUH output (see chart). As soon as there is even a minimal flow of domestic hot water, the flow switch activates both the boiler and the circulator and within seconds hot water will be available for domestic purposes.

DHWG Temp. Rise vs. Water Flow

Temp. Rise △t-˚F	Temp. DHW Flow Rate - GPM						
	CHS-85	LX-90	CHS-110	LX-120	LX-150	CHS-155	CHS-175
100	1.5	1.6	1.9	2.0	2.3	2.4	2.5
80	1.9	2.0	2.4	2.5	3.3	3.4	3.6
70	2.2	2.3	2.8	3.0	4.0	4.2	4.5
60	2.6	2.7	3.3	3.5	4.5	4.7	5.3
55	2.8	3.0	3.6	4.0	5.0	5.2	5.8

www.slantfin.com

Look for our Hydronic Explorer app on iTunes and Google Play! (Works on iPad, iPhone & Android devices)